A6V Series Variable Displacement Motor

Product show and brief introduction

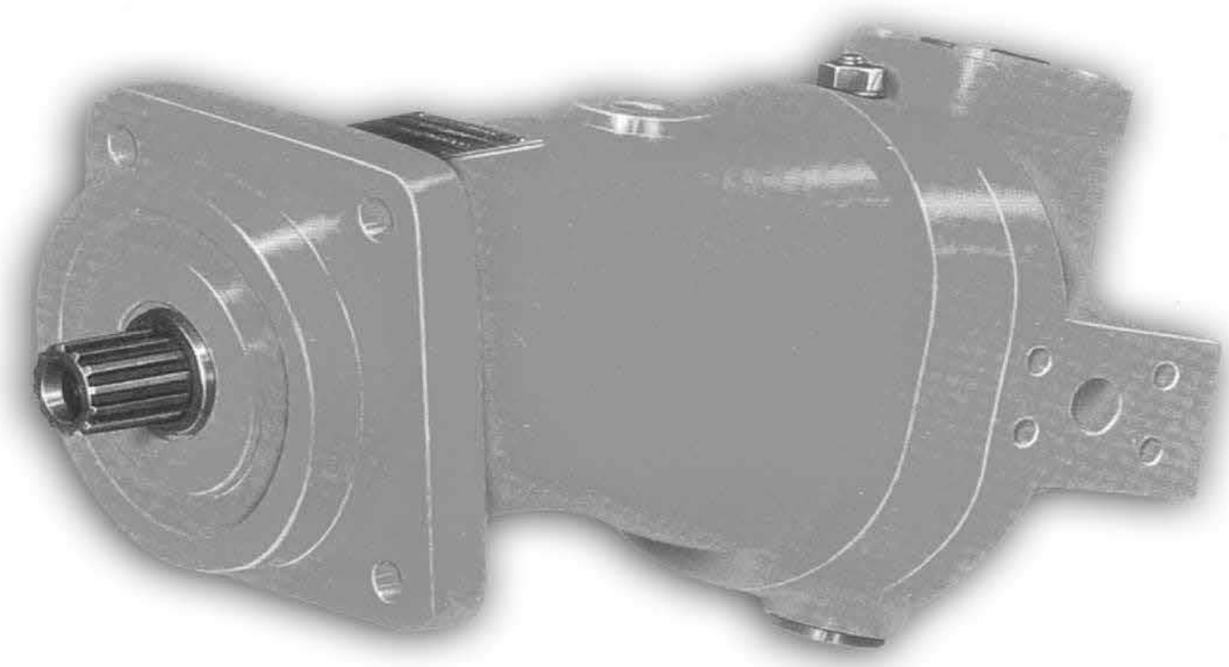

说明：

- 该变量马达是专为带次级控制的静液驱动设计的。
- 配有最大调节范围 $V_{max}/V_{min}=3.47$ 的整套控制总成。

特点：

- 用静液传动时有较大的调节范围
- 次级控制和带有各种控制装置的调节
- 在较小的倾角下提高最高输出转速
- 由于可用较小的泵而节省费用
- 省掉多速比齿轮驱动
- 高功率密度
- 允许高的外界轴载荷
- 任选安装位置
- 高效率
- 优秀的起动特性
- 小惯量

Description

The variable displacement motor was designed especially for hydrostatic drives with secondary controls.
A complete control assembly for a maximum swivel range of $V_{max}/V_{min}=3.47$ is fitted.

Special Characteristics

Large control range with hydrostatic transmissions.
Secondary control regulation with various control devices.
Increased maximum output. speeds at reduces swivel angle.
Cost-saving due to the possibility of using smaller pumps
Obviates the multispeed ratio gear drives.
High power density.
Optional mounting position.
High efficient.
Excellent starting characteristics.
Low inertia.

剖视图：

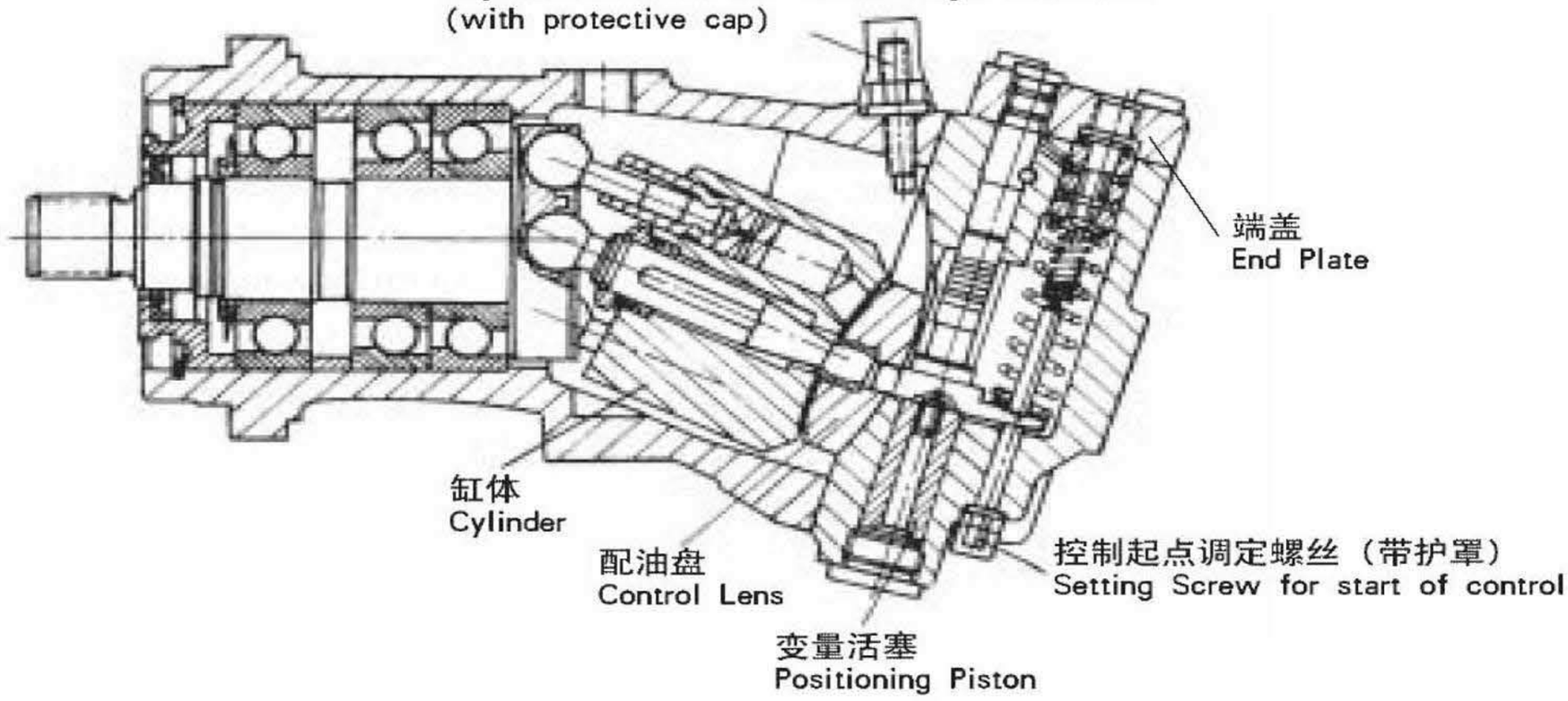

A6V	80	HA2	2	F	Z	2	–	039

马达型号 Motor Type

变量马达 Variable displacement motor — A6V

规格 Size

8.1–28.1ml/r	28
15.8–54.8ml/r	55
23–80ml/r	80
30.8–107ml/r	107
46–160ml/r	160
64.8–225ml/r	225
137–500ml/r	500

(排量 V_{gmin}–V_{gmax}) Displacement

变量方式 Control Device

液控变量 Hydraulic control, pilot pressure related	控制压差△p=1MPa Pilot pressure increase	HD1
	带恒压控制△p=1MPa With pressusre control	HD1D
	控制压差△p=2.5MPa Pilot pressure increase	HD2
	带恒压控制△p=1MPa With pressusre control	HD2D
液控双速变量 Hydraulic 2-speed control pilot pressure related	控制起点 Start of control 0.2–2MPa	HSI
	控制起点 Start of control 0.5–5MPa	HS2
高压自动变量 Automatic control, high pressure related	恒压 Constant pressure	HA1
	不带超调 Without override	
	带超调 With override	HA1H
	升压 Pressure increase △p=10MPa	HA2
	不带超调 Without override	
	带超调 With override	HA2H
转速液控变量	Hydraulic control, speed related	DA
电控双速变量	Electrical 2-speed control 12V	ES1
	(with switching solenoid)24V	ES2
电控比例变量	Electrical control 12V	EP1
	(with proportional solenoid) 24V	EP2
扭矩变量	Mooring control	MO
手动变量	Manual control (with handwheel)	MA

最小排量设定值

Min.Swept Volume Setting

例： Example.

Vgmin=39ml/r — 039

起重机系列产品专用(带单向节流阀)

For crane products

装配型式 Assembly Type

		–
解释见变量说明及元件尺寸	For explanation see description of control device and unit dimensions	1
		2

轴伸 Shaft End

平键 GB 1096-79	Keyed parallel shaft	P
花键 DIN 5480	Splined shaft	Z
花键 GB 3478.1-83	Splined shaft	S

油口连接 Pipe Connections

SAE 法兰，侧面	SAE flange,on side	F
螺纹连接，侧面	Metric threads,on side	G

结构型式 Series

结构 2，规格 28–225	Series 2,sizes 28–225	2
结构 1，规格 500	Series 1,size 500	1

订货示例： A6V80HD12FZ2-039

Ordering Example A6V80HD12FZ2-039

斜轴变量马达 A6V，规格 8 0，液控变量，△p=1MPa，结构2，侧面SAE法兰连接，德标花键，第2种装配型式，最小排量 V_{gmin}=39ml/r

Axial piston variable displacement motor A6V,size 80,with hydraulic control,pilot pressure related, △p=1MPa, series 2.SAE flange connections on side,splined shaft, assembly type 2,min.swept volume setting V_{gmin}=39ml/r

技术参数 Technical Data

工作压力范围：Operating Pressure Range

A或B口压力：	Pressure at port A or B
额定压力	Nominal pressure _____ p_n=31.5MPa
最高压力	Peak pressure _____ p_{max}=35MPa
A、B油口压力总和不得超过63MPa,每侧油口压力最高35MPa。	The sum of the pressures at ports A and B should not exceed 63MPa. (Individual pressure at either port max.35MPa
泄油压力：	Leakage oil Pressure：
允许T口最大泄油压力	Maximum permissible leakage oil pressure (at Port T)
	P_{abs} _____ 0.2MPa

油温范围：Fluid Temperature Range

t_{min} _____ −25℃

t_{max} _____ +80℃

粘度范围：Viscosity Range:

v_{min} _____ 10mm²/s

v_{max} ___ (短时)(for short periods)1000mm²/s

最佳工作粘度：Optimum Operating Viscosity:

v_{opt} _____ 16—36mm²/s

油液选择：Fluid Recommendation

工作温度 Operating Recommended

推荐粘度等级 Viscosity grade temperature to DIN51519

符合DIN51519 range ISO(VG)

30−40℃	VG22=22mm²/s	at40℃
40−50℃	VG32=32mm²/s	at40℃
50−60℃	VG46=46mm²/s	at40℃
60−70℃	VG68=68mm²/s	at40℃
70−80℃	VG100=100mm²/s	at40℃

液压油的过滤：

推荐过滤精度为10μm。亦可使用25−40μm的，但使用10μm的可以延长使用寿命（降低磨损）。

转速范围：

最低转速没有限制，在要求十分均匀的转速时，n_{min}不小于50r/min

最高转速由来自泵的最大流量和变量马达的最小排量确定。最小排量则由一个调节螺钉限位，所以变量马达不会超速运转。

最高允许转速见技术参数表。

Filtration of Hydraulic Fluid

Recommended filtration 10μm .Coarser filtration of 25 to 40μm is possible,however longer service life is achieved with filtration of 10μm .(reduced wear).

Speed Range

No limitation on minimum speed n_{mim}.Where very even speeds are required. n_{min} should not be less than 50r/min.

The maximum flow from the pump and the minimum swept volume of the variable motor together determine the maximum output speed.

The min swept volume is limited mechanically by means of an adjustment screw so that the max. permissible speeds (of the variable motor and the driven unit) cannot be exceeded. See date table for max.permissible speeds.

规格计算： Calculation of size

流量 Swept Volume $Q=\frac{V_g \cdot n}{1000 \cdot \eta_v}$ [L/min]

输出转速 Output Speed $n=\frac{Q \cdot 1000 \cdot \eta v}{V_g}$ [r/min]

输出扭矩 Output Torque $M=\frac{V_g \cdot \triangle p \cdot \eta_{mh}}{2\pi}$

$\frac{1.59 V_g \cdot \triangle p \cdot \eta_{mh}}{10}$ [Nm]

或 or $M=\frac{K_M \cdot \triangle p \cdot \eta_{mh}}{10}$ [Nm]

输出功率 Output Power $P=\frac{M \cdot n}{9549}$

$=\frac{Q \cdot \triangle p}{60} \cdot \eta_t$ [KW]

V_g= 最大排量(ml/r)	max geometry displacement[ml/r]
M= 扭矩 (Nm)	torque[Nm]
$\triangle_p$= 压差 (MPa)	differential pressure[MPa]
n= 转速(r/min)	speed[r/min]
η_V= 容积效率	volumetric efficiency
η_{mh}= 机械效率	mechanical−hydraulic efficiency
η_t= 总效率	overall efficiency

技术参数表 Technical Data

规格	Size			28	55	80	107	160	225	500
变量方式	Control Device									
HD液控变量	Hydraulic control pilot pressure related			•	•	•	•	•	•	•
HD1D液控恒压变量	Hydraulic control pilot pressure related				•		•			
HS液控（双速）变量	Hydraulic control(two speed), pilot pressure related			•	•	•	•	•	•	•
HA高压自动变量	Automatic control,high pressure related			•	•	•	•	•	•	
DA转速液控变量	Hydraulic control.speed related			•	•	•	•	•		
ES电控（双速）变量	Electric control (two speed)			•	•	•	•	•		
EP电控（比例）变量	Electric control (proportional)			•	•	•	•	•		
MO扭矩变量	Mooring control			•	•	•	•	•	•	
MA手动变量	Manual control									
排量	Displacement	V_{gmax}	ml/r	28.1	54.8	80	107	160	225	500
		V_{gmax}	ml/r	8.1	15.8	23	30.8	46	64.8	137
最大允许流量	Max.Permissible.Swept volome Q_{gmax}		L/min	133	206	268	321	424	530	950
最高转速	Max.speeds	n_{max} 在at V_{gmax}	r/min	4750	3750	3350	3000	2650	2360	1900
	(在at Q_{max} 下)	n_{max} 在 at $V_g<V_{gmax}$	r/min	6250	5000	4500	4000	3500	3100	2500
扭矩常数	Torque constants	M_x 在at V_{gmax}	Nm/MPa	4.463	8.701	12.75	16.97	25.41	35.71	79.577
		M_x 在at V_{gmin}	Nm/MPa	1.285	2.511	3.73	4.9	7.35	10.30	21.804
最大扭矩	Max.torque	M_{max} 在at V_{gmax}	Nm	156	304	446	594	889	1250	2782
	(在at △p=35MPa)	M_{max} 在at V_{gmin}	Nm	45	88	130	171	257	360	763
最大输出功率(在35MPa和Q_{max}下)Max.output power(at 35MPa and Q_{max})			kW	78	120	156	187	247	309	507
惯性矩	Moment		kgm²	0.0017	0.0052	0.0109	0.0167	0.0322	0.0532	
重量	Weight		kg	18	27	39	52	74	103	223

HD 液控变量

按外控油源的先导压力来无极的控制马达的排量
标准结构：按第2种装配型式供货
控制起点在 V_{gmax}(最大扭矩、最低转速)
控制终点在 V_{gmin}(最小扭矩、最高转速)
对于第一种装配型式，控制功能相反：
控制起点在 V_{gmin} 控制终点在 V_{gmax}。
变量机构的设定
有两种方案供选用：
1.HD1－先导压力压差(由 $V_{gmax} \longrightarrow V_{gmin}$)－△Ps=1MPa
控制起点可调 _____ 从0.2－2MPa
标准设定值：控制起点压力为0.3MPa，控制终点压力为1.3MPa
2.HD2－先导压力压差(由 $V_{gmax} \longrightarrow V_{gmin}$)－△Ps=2.5MPa
控制起点可调 _____ 从0.5－5MPa
标准设定值：控制起点压力为1MPa，控制终点压力为3.5MPa，
当用HD作双速控制时，最高先导压力可到7.5MPa
外控口x处的供油量：约0.5L/min.
当工作压力<1.5MPa时，必须在G口供入1.5MPa的辅助压力。

Hydraulic Control,Pilot Pressure Related,HD

Stepless control of the motor capacity dependent on a pilot pressure signal.
Standard model:assembly type 2
Start of control at V_{gmax}(max.torque, min.speed)
End of control at V_{gmax}(min.torque,max.speed)
For assembly type 1,the control function is reversed:
Start of control at V_{gmin},end of control at V_{gmin}
Setting of Regulator
Two options are available:
1.HD1
Pilot pressure increase adjustable(V_{gmax} － V_{gmin}) －△Ps=1MPa
Start of control adjustable－from 0.2－2MPa
Standard setting:start of control at 0.3MPa (end of control at 1.3MPa)
2.HD2
Pilot pressure increase (V_{gmax} － V_{gmin}) －△Ps=2.5MPa
Start of control adjustable－from 0.5－5MPa
Standard setting:start of control at 1.0MPa (end of control at 3.5MPa)
When using the HD control as a two－point control a max.pilot pressure of 7.5MPa is permissible.
The max oil flow at pilot X is approx 0.5L/min.
Should the available operating pressure be <1.5MPa then an auxiliary pressure of 1.5MPa must be applied at port G.

HD. 液控变量(HD1、HD2)

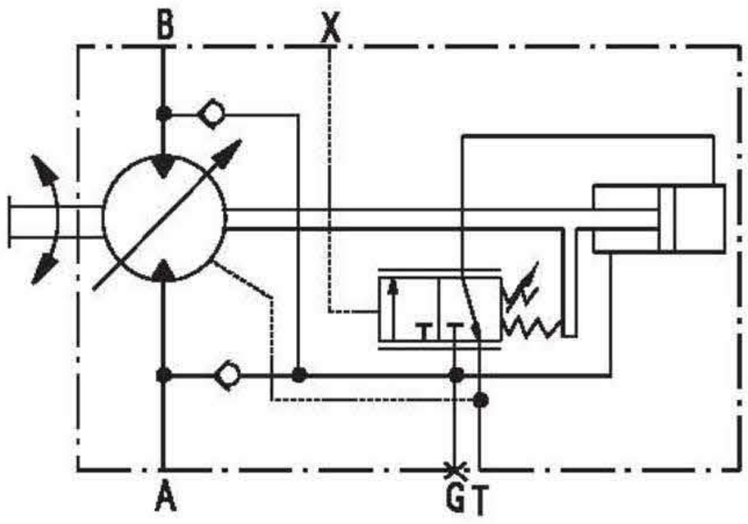

HD1D 液控恒压变量

恒压控制是在HD功能基础上增加的。
如果系统压力由于负载扭矩缘故或由于马达摆角减小而升高，则达到恒压控制的设定值时，马达摆出到较大的摆角。
由于增大排量和减小压力，控制偏差消失。
通过增大排量，马达在恒压下产生较大扭矩。
通过在油口G2处施加一压力信号可得到第二个恒压设定压力。
(如起身和下降)，该信号须在2－5MPa之间。
恒压控制阀的设定范围为8－40MPa.
标准型：按第二种装配型式供货。
控制起点在 V_{gmax}(最大扭矩、最低转速)
控制起点在 V_{gmin}(最小扭矩、最高转速)

HD1D:Constant pressure control

The constant pressure control is superimposed on the HD function.
Should system psressure rise as a result of the load torque or reduction of the motor swivel angle,When the setting swivelled out to a higher angle.
As a result of the increased displacement and consequent pressure reduction, the control debiation is eliminated.By increaseing the displacement the motor produces a higher torque at a constant pressure.
Throw a pressure signal at port G2 will receive the second consstant setting pressure.
(for example rise and drop),the signal between 2 and 5MPa.
Setting range of constant pressure control valve:8－40MPA

HD1,HD2

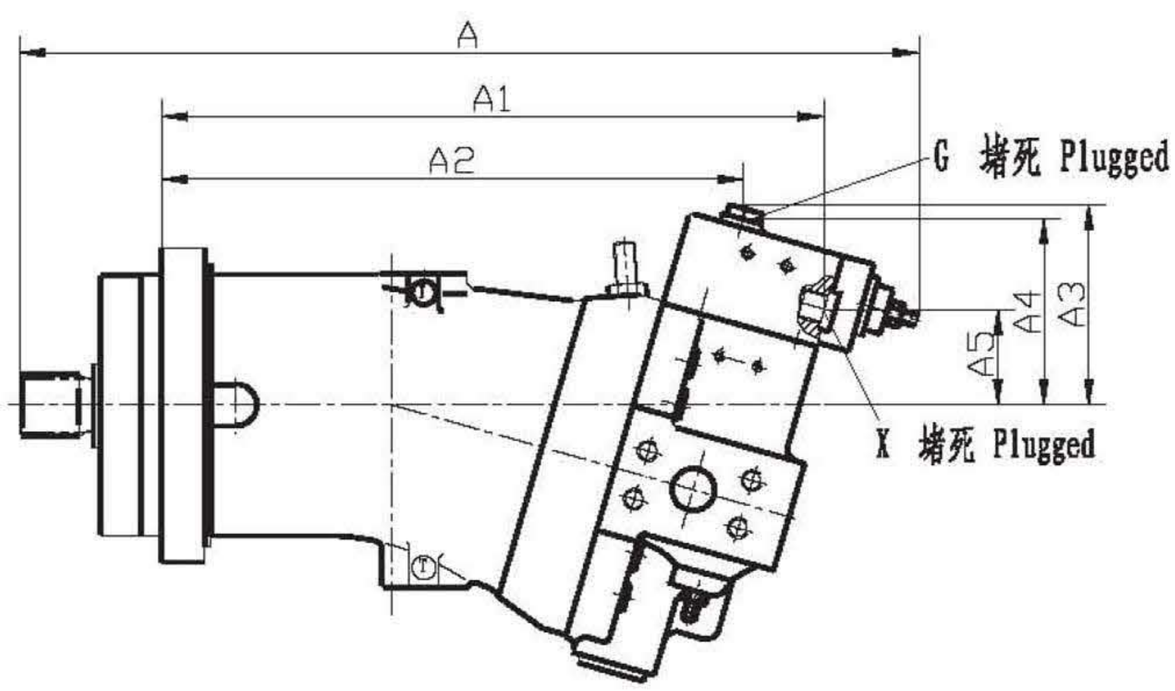

HS 液控双速变量

按外控油源的先导压力来两点式的控制马达排量
标准结构：按第 2 种装配型式供货。
控制起点在 V_{gmax}(最大扭矩、最低转速)
控制终点在 V_{gmin}(最小扭矩、最高转速)
对于第一种装配型式，控制功能相反：
控制起点在 V_{gmin} 控制终点在 V_{gmax}。
变量机构的设定
有两种方案供选用
1.HS1 – 控制起点可调 – 从 0.2–2MPa
2.HS2 – 控制起点可调 – 从 0.5–5MPa
(由 $V_{gmin} \rightarrow V_{gmax}$)– $\triangle p \leqslant 0.2$MPa
外控口 x 处的供油量：约 0.5L/min.
当工作压力 < 1.5MPa 时，必须在 G 口供入 1.5MPa 的辅助压力。

Hydraulic Control,2-Speed Pilot Pressure Related,HS

Two point Control of the motor capacity dependent on a pilot pressure signal.
Standard model:assembly type 2
Start of control at V_{gmax}(max.torque,min speed)
End of control at V_{gmin}(min.torque,max, speed)
For assembly type 1,the control function is reversed:
start of control at V_{gmin},end of control at V_{gmax}.
Setting of Regulator
Two options are available:
1.HS1–Start of control adjustable–from 0.2–2MPa
2.HS2–Start of control adjustable–from 0.5–5MPa
(V_{gmin}–V_{gmax})– $\triangle P \leqslant 0.2$MPa
The max oil flow at pilot X is approx 0.5L/min.
Should the available operating pressure be<1.5MPa then an auxiliary pressure of 1.5MPa must be applied at port G.

HS. 液控双速变量(HS1、HS2)

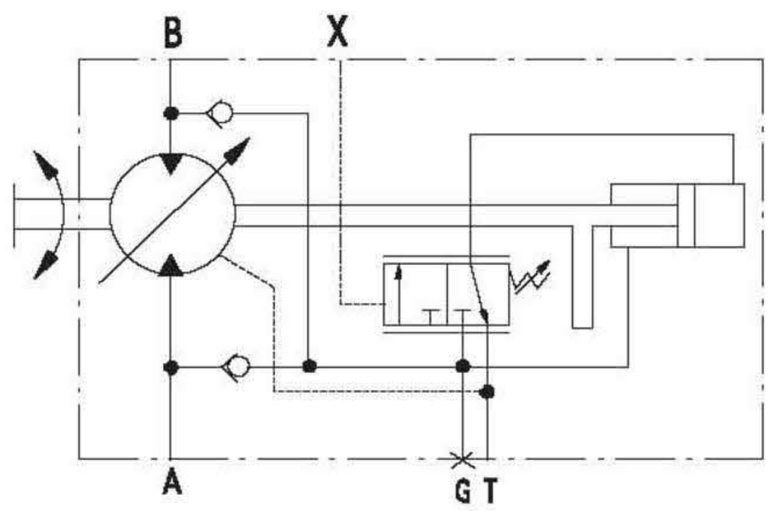

HA 高压自动变量

按工作压力自动控制马达排量
标准结构：按第 1 种装配型式供货
控制起点在 V_{gmax}(最小扭矩、最高转速)
控制终点在 V_{gmin}(最大扭矩、最低转速)
此种变量方式，当 A 或 B 口的内部工作压力达到设定值时，马达由最小排量 V_{gmin} 向最大排量 V_{gmax} 转变。
控制起点在 8 至 35MPa 间可调。
有两种方式供选用：
1.HA1– 在控制范围内，工作压力保持恒定。$\triangle P$=1MPa
从 V_{gmin} 变至 V_{gmax} 时，压力升高约为 1MPa。
2.HA2– 在控制范围内，工作压力升高。$\triangle P$=10MPa
从 V_{gmin}(7°)变至 V_{gmax}(25°)时，压力升高 10MPa。
HA 变量可在 X 口进行外控（即带有超调），在这种情况下，变量机构的压力设定值（工作压力）按每 0.1MPa 先导（外控）压力下降 1.6MPa 的比率降低。
例如：
变量机构起始变量压力设定值为 30MPa。
先导压力(X 口)：0MPa 时变量起点在 30MPa。
先导压力(X 口)：1MPa 时变量起点变为 14MPa。
(30MPa–10 × 1.6MPa=14MPa)

Automatic Control,High Pressure Related,HA

Automatic,control of motor capacity dependent on operating pressure.
Assembly type 1 Standard model:assembly type 1
Start of control at V_{gmin}(min.torque,max speed)
End of control at V_{gmax}(max.torque,min speed)
This control device measures the internal operating pressure at port A or B (no pilot line required),and when the set operating pressure is reached, swivels the motor from min.capacity(V_{gmin}) to max.capacity(V_{gmax}).
Start of control is adjustable between 8MPa and 35MPa.
Two options are available:
1.HA1–Within the control range,the operating pressure is held practically constant.$\triangle P$=1MPa Pressure increase between V_{gmin} and V_{gmax} is approx 1MPa.
2.HA2–Within the control range,with pressure increase
$\triangle P$=10MPa from V_{gmin}(7°) to V_{gmax}(25°).
The HA control can be overridden at port X.In this case,the set value of pressure at the regulator(operating pressure)is reduced 1.6MPa per 0.1MPa pilot pressure.
Example:
Regulator setting:30MPa.
Pilot pressure(at X):0MPa start of control at 30MPa
Pilot pressure(at X):1MPa start of control at 14MPa
(30MPa–10 × 1.6MPa=14MPa)

带有超调的HA,变量有两种方式供选用：

1.HA1H－在控制范围内，工作压力保持恒定，△P=1MPa。
2.HA2H－在控制范围内，工作压力升高 ，△P=10MPa。
如果控制仅需达到最大排量，则允许先导压力最高为5MPa。
外控口X处的供油量0.5L/min。

Two options are available for HA control with override.

1.HA1H－With in the control range,the operating pressure is held, practically constant,△P=1MPa。
2.HA2H－With in the control range,the operating pressure in crease, △P=10MPa。
If override is only required to set max.capacity(swivelling the motor to V_{gmax}),a pilot pressure of up to 5MPa max is permissible.
The max oil flow at X is approx 0.5L/min.

HA. 高压自动变量 (HA1)

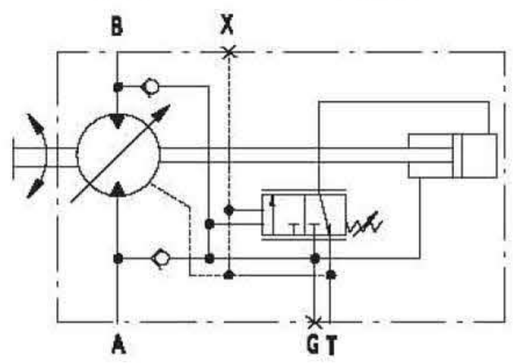

HA. 高压自动变量 (HA1H)

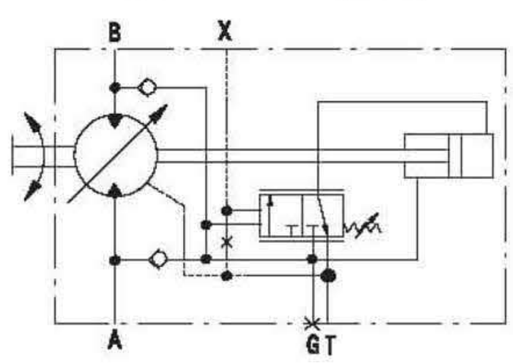

HA. 高压自动变量 (HA2)

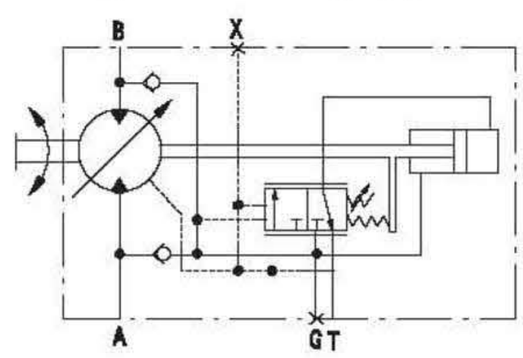

HA. 高压自动变量 (HA2H)

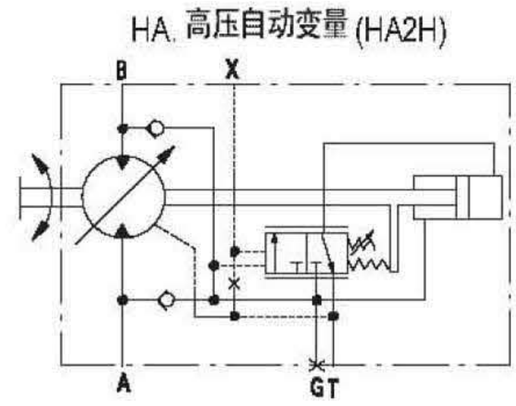

ES,电控双速变量

马达排量处于V_{gmin}或V_{gmax}是由控制电磁铁通断来实现。
标准结构：按第2种装配型式供货
控制起点在V_{gmax}(最大扭矩、最低转速)
控制终点在V_{gmin}(最小扭矩、最高转速)
对于第一种装配型式，控制功能相反：
有两种方案供选用 ：
1.ES1－控制电压12VDC
2.ES2－控制电压24VDC

ES. 电控双速变量

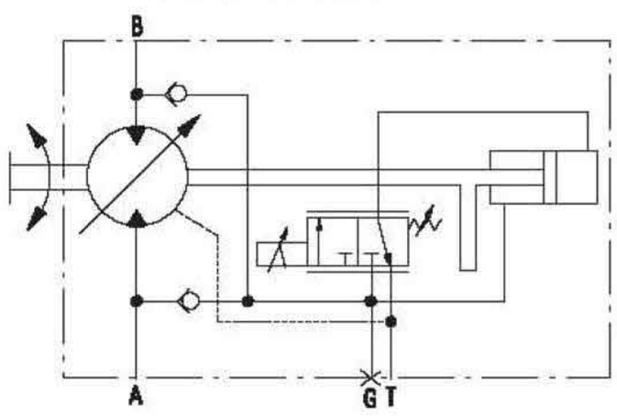

ES,Electrical 2-Speed Control

The motor capacity is set to V_{gmin} or V_{gmax} by switching on or off an electrical current at the switching solenoid.
Standard model:assembly type 2
Start of control at V_{gmax}(max.torque min speed)
End of control at V_{gmin}(min.torque max speed)
For assembly type 1 the control function is reversed.
Two options are available:
1.ES1－control voltage 12VDC
2.ES2－control voltage 24VDC

EP,电控比例变量

根据电信号无级的或双点的控制马达排量
标准结构：按第2种装配型式供货
控制起点在V_{gmax}(最大扭矩、最低转速)
控制终点在V_{gmin}(最小扭矩、最高转速)
对于第一种装配型式，控制功能相反：
能过比例电磁铁操纵液压控制。
有两种方案供选用 ：
1.ES1－控制电压12VDC 400mA－900mA
2.ES2－控制电压24VDC 200mA－450mA
如果仅要求变量马达作双点（双速）控制，则只要使
电流通断即可得到这两个位置（对第2种装配型式在V_{gmax}断电，对第1种装配型式在V_{gmin}断电）。
如果工作压力低于1.5MPa,则在G口要求引入1.5MPa的辅助压力。

EP, 电控比例变量

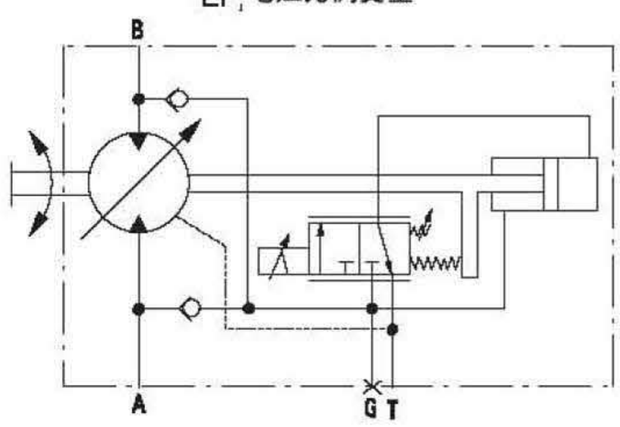

EP Electrical Proportional Control

For two-speed control of the motor capacity, or for two point control dependent on an electrical signal.
Standard model:assembly type 2
Start of control at V_{gmax}(max.torque,min.speed)
End of control at V_{gmin}(min.torque,max.speed)
For assembly type 1,the control function is reversed.
The hydraulic control is operated by a proportional solenoid.
Two options are available:
1.EP1－control voltage 12VDC
2.EP2－control voltage 24VDC
Should the variable motor only be required for two point control, simply switching the current on and off is sufficient to attain these two positions (for assembly type 2:deenergise at V_{gmax},for assembly type 1:deenergise at V_{gmin}).if the operating pressure is less than 15MPa,then an auxiliary pressure of 15MPa is required at port G.

DA.转速液控变量

转速液控变量只用于与变量泵 A4V.DA 合用的传动系统。
装配型：2
变量起点，按先导压力：在 V_{gmax}(到 V_{gmin})
按工作压力：在 V_{gmin}(到 V_{gmax})
起点在 V_{gmax}（最大扭矩）。
由 A4V 变量泵确定的先导压力（提高原动机转速＝提高变量泵转速＝提高先导压力）引到 X1 或 X2 口，视行驶方向而定，使马达向减小排量方向转变（扭矩减小，转速增加）。
若工作压力升高到超过变量机构设定的压力值，则马达向增大量排量方向转变（扭矩增大，转速降低）。
先导压力与高压保持定值：Pst/PH=3/100.
先导压力变化 0.3MPa(升或降）相应使工作压力升、降 10MP。
设计带 DA 变量的驱动时，必须考虑 A4V.DA 变量泵的技术数据。

DA 转速液控变量

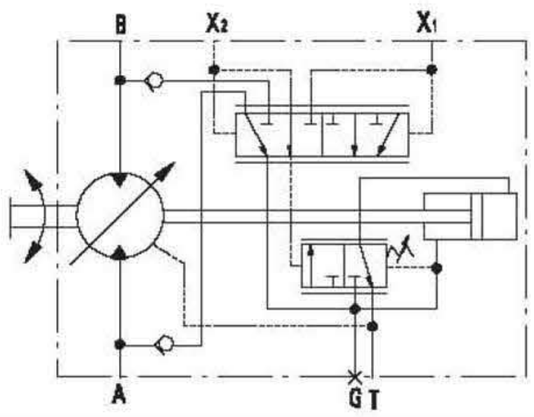

DA Hydraulic Control,Speed Related.

Speed related hydraulic control is used exclusively for transmission drives in conjunction with variable pump A4V.DA.
Assembly design 2
Start of control,pilot pressure dependent at V_{gmax}(to V_{gmin}),high pressure dependent at V_{gmin}(to V_{gmax}).
Start point at V_{gmax}(max.torque).
The pilot pressure, which is determined by the variable pump A4V (increasing speed of prime mover=increasing speed of variable pump=increasing pilot pressure)is directed to ports X1 or X2 dependent on the direction of travel, and causes a swivelling towards smaller motor capacity(lower torque ,higher speed).
Should the operating pressure rise above the set pressure value at the regulator,the variable motor swivels to a higher capacity(higher torque,lower speed).
Pilot pressure and high pressure remain in a fixed relationship Pst/PH=3/100.
0.3MPa variation pilot pressure(rise or fall)gives a pressure rise or fall of 10MPa in operating pressure.
When designing a drive with a DA control the technical data of the variable pump type A4V.DA must be considered.

MO.扭矩变量

扭矩变量，主要用来驱动绞车，产生恒定的牵引力。
装配型式：第 1 种装配型式
控制起点在 V_{gmin}(最小扭矩、最高转速)
变量机构的设定：
先导压力升高(V_{gmin}-V_{gmax})△p=5MPa，控制起点从8-35MPa，可调(订货时注明)。
通过改变马达的排量可以得到恒定的扭矩，它可根据需要进行改变，使铰车产生恒 定的牵引力。如果卷筒上没有拉力，则马达在较低的压力下工作，从而先导压力也较低，马达排量减小，转速增加，铰车加速运转，直至达到铰车的拉力时保持拉力并停止运转。为限制马达的最高转速 ，在回中马达前面应设有流量阀或尖似元件。
作为扭矩变量本身的先导控制，可采用一个溢流阀调节。X 口最大供油量约为 5L/min，随先导压力与工作压力差的降低，先导油液流量也减小。

MO 扭矩变量

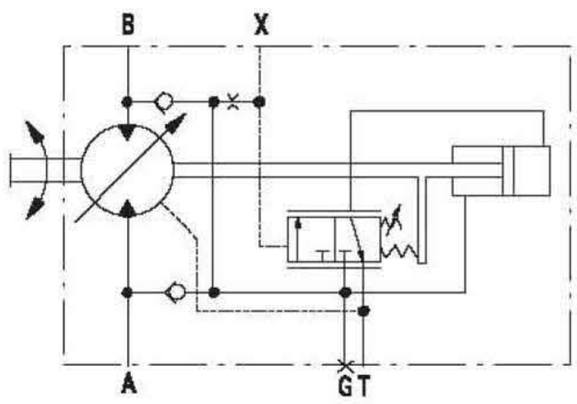

MO,Mooring Control

The mooring control is used mainly for the drive of winches,to generate a constant line pull.
Assembly type 1
Start of control at V_{gmin}(min.torque,max.speed)
Setting of Regulator
Pilot pressure increase(V_{gmin}-V_{gmax})△p=5MPa.
Start of control adjustable from 8 to 35MPa (must be indicated in cleat text when ordering).
A constant torque, which may be altered according to requirements in order to generate a constant line pull at the winch is achieved by varying the capacity of the variable motor. If there is no pull at the drum, the variable motor requires a lower operating pressure and therefore generates a smaller pilot pressure. The variable motor moves to a min.capacity(V_{gmin}).The higher motor speed thus resulting (warping speed)causes rapid operation of the winch until the mooring pull required of the winch is reached and set.
In order to limit the maximum speed of the variable motor, a flow limiting valve, or other such suitable, must be placed in the circuit before the motor.
As a pilot control for the mooring control itself, a variable pressure relief valve may be used. The max.oil flow at port X is approx5L/min.The pilot oil flow reduces with lower differential pressure between pilot pressure and operating pressure.

MA.手动变量

通过手轮驱动螺杆以调节马达的排量。装配型式：第 1 种装配型式

MA 手动变量

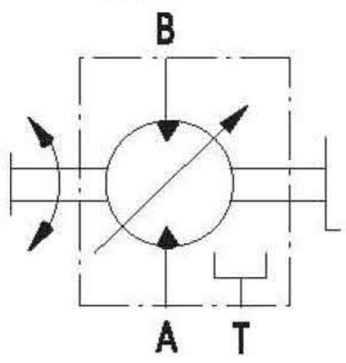

MA,Manual Control

Adjustment of motor capacity dependent on the position of a threaded spindle-hand operation.
Assembly design 1

(P-M) 和 (V_g $\frac{n}{n 在 V_{gmax} 时}$) 特 性

Characteristic (P-M)and(V_g $\frac{n}{n \text{ at } V_{gmax}}$)

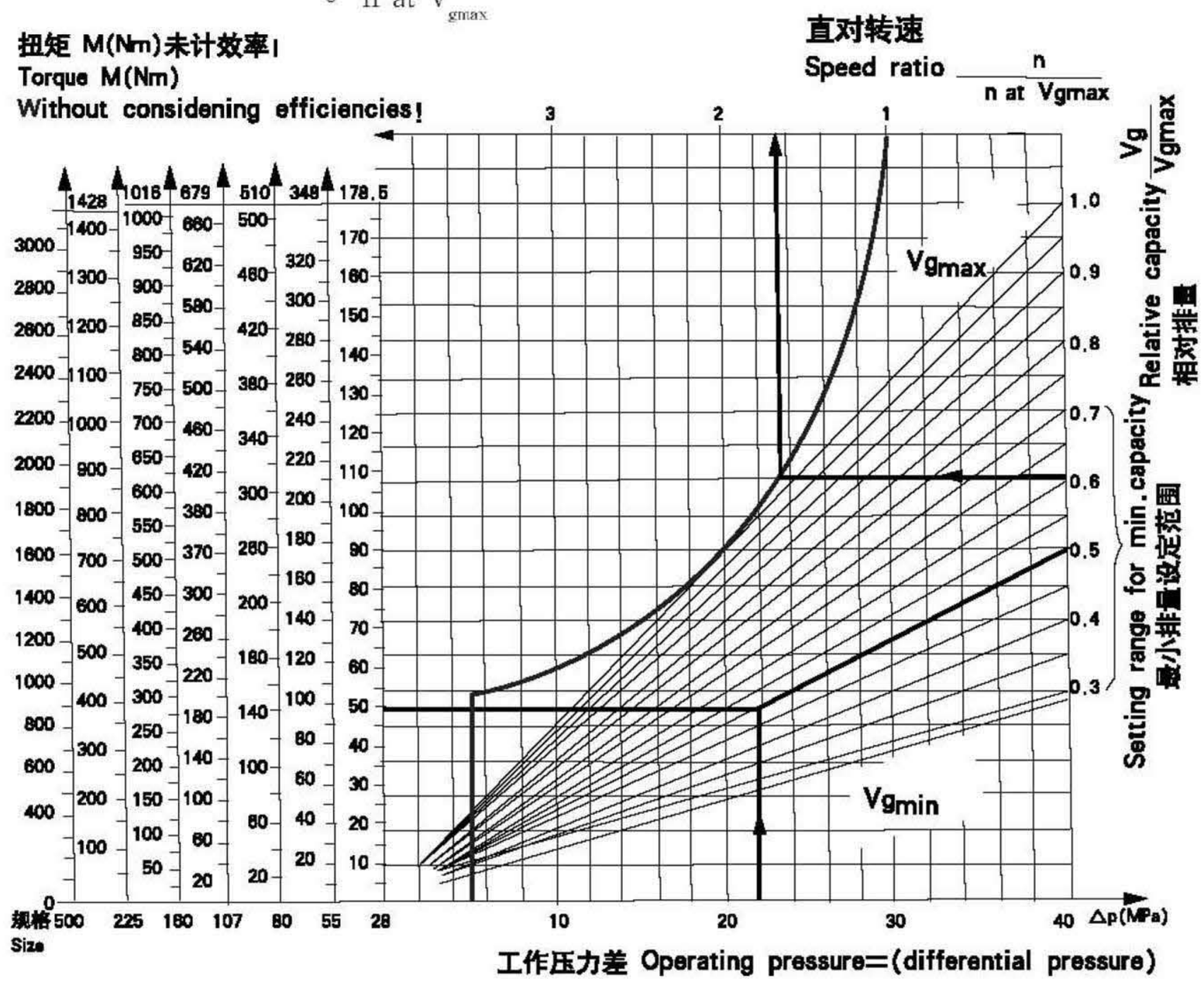

应用示例 1

规格 55:压差 △P=22MPa

排量 V_g=27.4ml/r

求：输出扭矩 M

解：相对排量

$\frac{V_g}{V_{gmax}}=\frac{27.4}{54.8}=0.5$

在图表即可按 $V_g=0.5V_{gmax}$，△P=22MPa

查出 M=96Nm.

Example 1

Size 55

Differential pressure △P=22MPa

Capacity V_g=27.4ml/r

Required:Output torque M

Solution:Capacity V_g=27.4Ml/r

$\frac{V_g}{V_{gmax}}=\frac{27.54}{54.8}=0.5$

$0.5V_{gmax}$ at 22 MPa gives an output torque M of 96Nm.

应用示例 2

规格 55 排量 V_g=32.9ml/r

求：相对转速

由 $\frac{V_g}{V_{gmax}}=\frac{32.9}{54.8}=0.6$

据此由图表中查出相对转速：

$\frac{n}{n_{max}}=1.666$

即可同样流量下，马达转速是最大排量(V_{gmax})时的 1.666 倍。

Example 2

Size 55

Capacity V_g=32.9ml/r

Required:Speed ratio

Solution:Capacity V_g=32.9ml/r

$\frac{V_g}{V_{gmax}}=\frac{32.9}{54.8}=0.6$

$0.6V_{gmax}$ gives a a speed ratio of

$\frac{n}{n_{max}}=1.666$

I.e.at the same flow, the variable motor speed of rotation at factor of 1.666 times the speed at max capacity(V_{gmax}).

转速与排量的极限值

Limiting values for speed and capacity

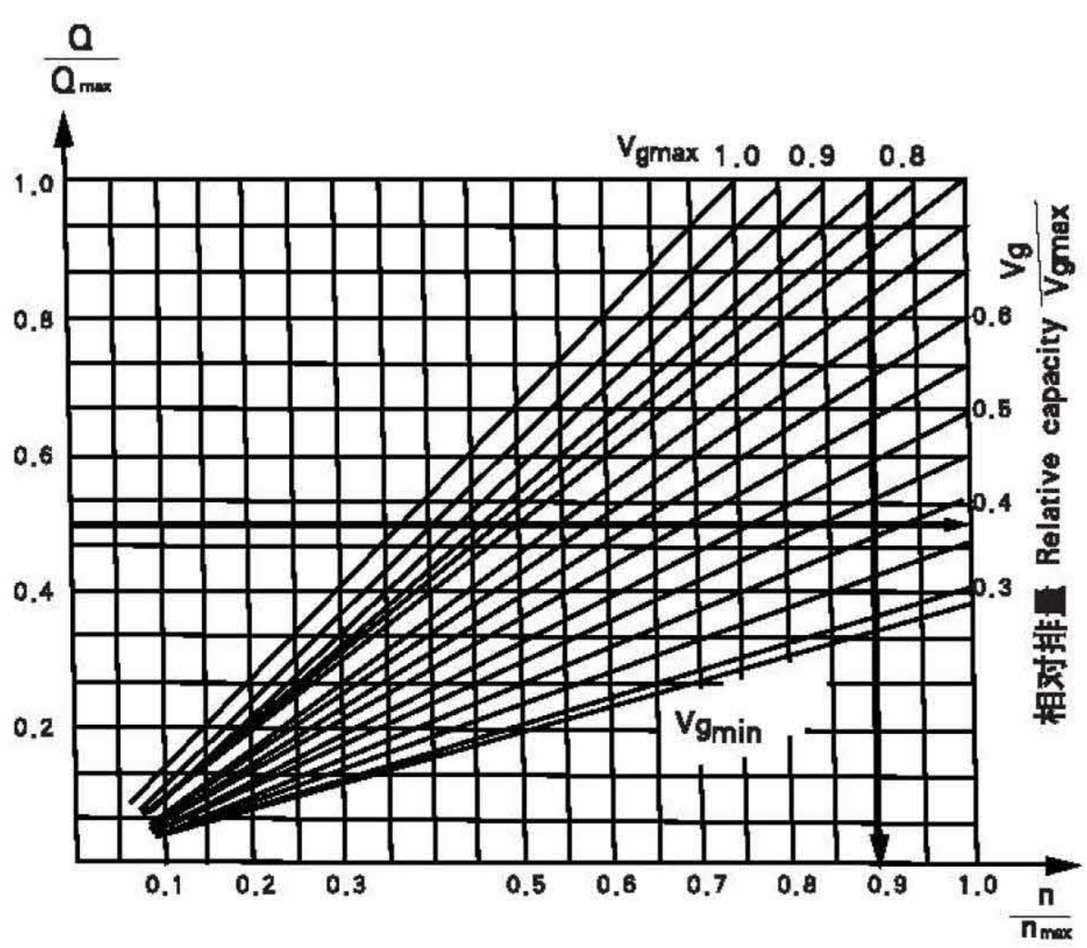

应用示例 1

规格 107

流量 Q=160.5L/min

求：不超过马达允许最高转速的最小排量（当 $V_g<V_{gmax}$）

解：规格 107 的允许最大流量是：

Q_{max}=321L/min.因此

$\frac{Q}{Q_{max}}=\frac{160.5}{321}=0.5$

由表查出相对排量为：

$\frac{V_g}{V_{gmax}}=0.375$

因此马达最小排量为：

$0.375\times V_{gmax}=0.375\times 107$

$=40.125ml/r$

Example 1

Size 107

Oil flow Q-160.5L/min

Required: Minimum permissible capacity in order not to exceed the maximum permissible motor speed

(at $V_g<V_{gmax}$)

Solution:Max permissible oil flow for size 107 is 321L/min,therefore

$\frac{Q}{Q_{max}}=\frac{160.5}{321}=0.5$

This gives a capacity of :

$\frac{V_g}{V_{gmax}}=0.375$

The minimum motor capacity is therefore

$0.375\times V_{gmax}=0.375\times 107=40.125ml/r$

应用示例 2

规格 107

马达排量 V_g=91ml/r<V_{gmax}

求：允许最高转速 n

解：

相对排量

$\frac{V_g}{V_{gmax}}=\frac{91}{107}=0.85$

据此在图表中查出对应的相对转速

$\frac{n}{n_{max}}=0.9$

$\therefore n=0.9n_{max}$

$=0.9\times 4000=3600r/min$

Example 2

Size 107

Motor capacity V_g= 91ml/r<V_{gmax}

Required:

Maximum permissible speed n

Solution:Motor capacity

V_g=91ml $\therefore \frac{V_g}{V_{gmax}}=\frac{91}{107}=0.85$

The motor capacity $0.85V_{gmax}$ gives

$\frac{n}{n_{max}}=0.9$

$n=0.9\times n_{max}=0.9\times 4000$

$=3600r/min$

(P–M)和 (V_g – $\frac{n}{n\text{在}V_{max}\text{时}}$) 特性

Characteristic (P–M) and (V_g – $\frac{n}{n \text{ at } V_{max}}$)

扭矩 Torque M(Nm)

未计效率！ Without considering efficiency!

相对转速

Speed ratio $\frac{n}{n \text{ at } V_{max}}$

控制起点在 0.5 和 5MPa 间可调（设计△Ps=2.5MPa)

Beginning of control adjustable between 0.5 and 5MPa (design △Ps=2.5MPa)

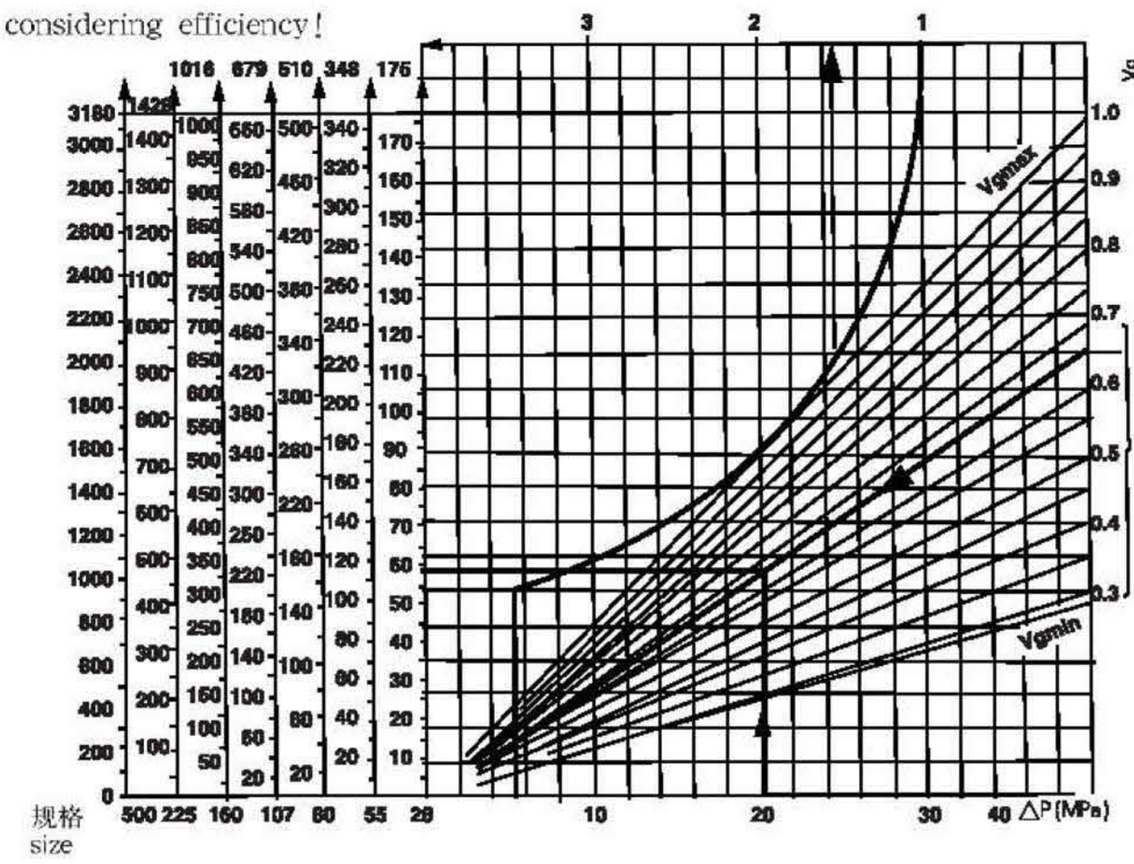

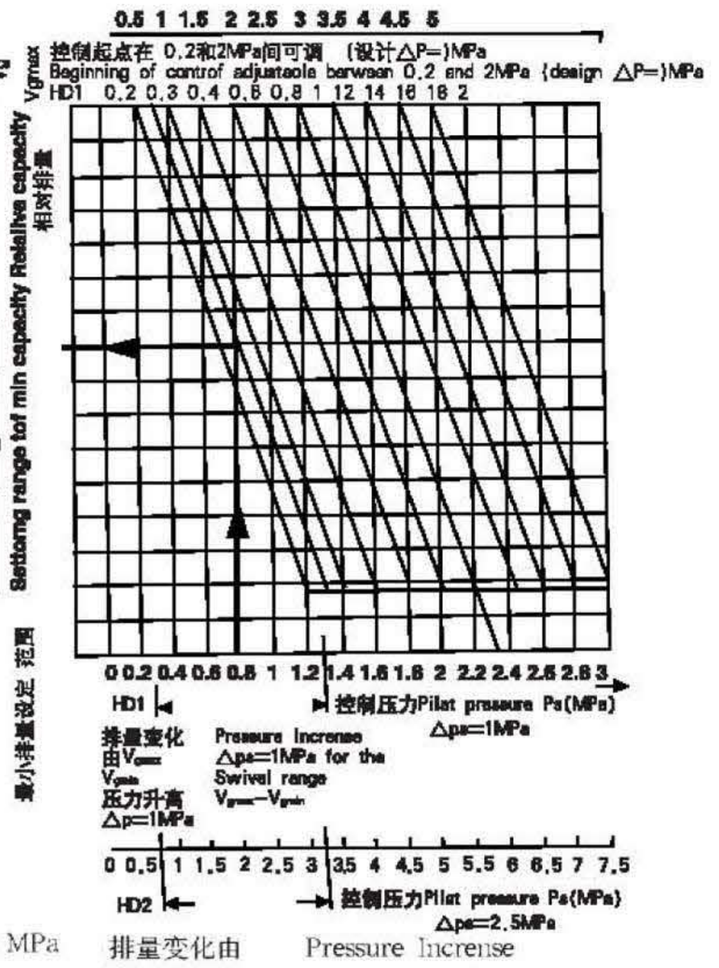

应用示例：

规格 55：HDI：△P_s=1MPa

当 P_s=0.8MPa 及 △P=20MPa 时

求：输出扭矩和相对转速

解：

Ps=0.8MFa 对应的 $\frac{V_g}{V_{gmax}}$ =0.65

和 $\frac{n}{n\text{在}V_{gmax}}$ =1.54

V_g=0.65 × V_{gmax}=0.65 × 54.8 =35.6ml/r

在△P=20MPa 时的扭矩

M=114Nm.

Example

size 55.HDI

Start of control at pilot pressure increase △P_s=1MPa

available pilot pressure main pressure P_s=0.8MPa and △P=20MPa

Required：Output torque and speed ratio

Solution：At a Pilot pressure of 0.8 MPa a capacity ratio $\frac{V_g}{V_{gmax}}$ =0.65 and speed ratio $\frac{n}{n \text{ at } V_{gmax}}$ =1.54

$\frac{V_g}{V_{gmax}}$ =0.65 sives a capacity of 0.65V_{gmax}=0.65 × 54.8=35.6ml/r

At a main pressure (differential pressure) of △P=20MPa the output torque will be approximatei approxi 114Nm

排量变化由 V_{gmax} V_{gmin} 压力 △P = 2.5MPa

Pressure Increase △Ps = 2.5MPa for the Swivel range 升高 V_{gmax}–V_{gmin}

EP 特性曲线 Control Curve

(P–M)和(V_g – $\frac{n}{n\text{在}V_{gmax}\text{时}}$) 特性

Characteristic (P–M) and (V_g – $\frac{n}{n \text{ at } V_{gmax}}$)

扭矩 Torque M(Nm)

未计效率！ Without considering efficiency!

相对转速

Speed ratio $\frac{n}{n \text{ at } V_{max}}$

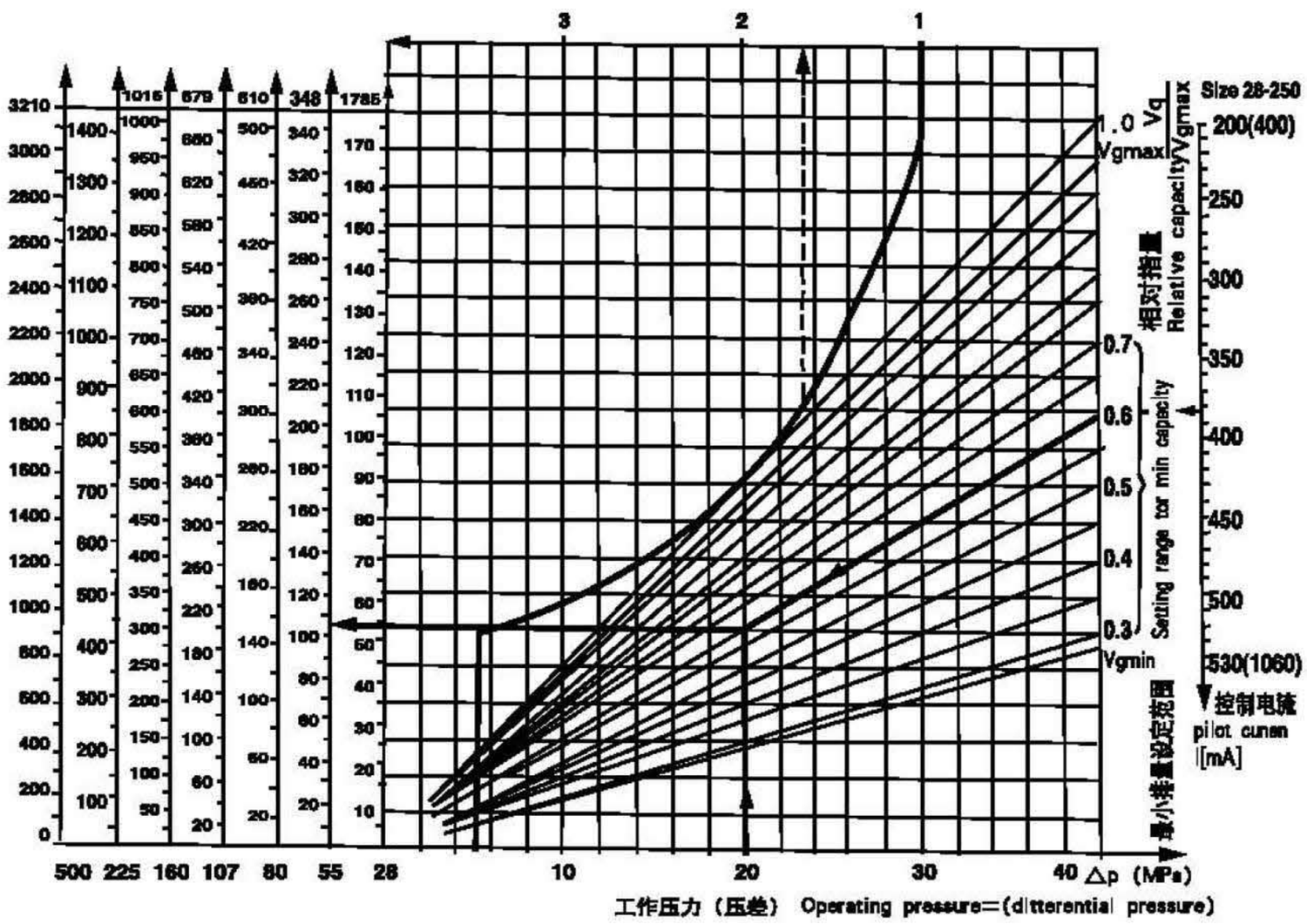

应用示例：

规格 55：控制电流 385mA(24V)

工作压力△P=20MPa

求：输出扭矩和相对转速

解：查表得 385mA 时的相对排量

$\frac{V_g}{V_{gmax}}$ =0.6

其对应的转速比

$\frac{n}{n\text{在}V_{gmax}\text{时}}$ = 1.666

即在相同的流量下，马达转速是最大排量 V_{gmax} 时的 1.666 倍。

由表中可以查出相对排量

$\frac{V_q}{V_{gmax}}$ =0.6

则 V_g=0.6V_{gmax}

=0.6 × 54.8

=32.9ml/r

在△P=20MPa 时的输出扭矩

M=105Nm

Example：

Size 55

Pilot current 385 mA(24V)

Operating pressure △P=20MPa

Required:Output torque and speed ration

Solution:At a pilot current of 385 mA.

a capacity ratio $\frac{V_q}{V_{gmax}}$ =0.6 and a speed ratio of

$\frac{n}{n \text{ at } V_{gmax}}$ =1.666

is obtainedi.e. for same oil flow the variable motor rotates at a factor of 1.666 faster than at max capacity $V_{gmax.}$ The capacity ratio $\frac{V_q}{V_{gmax}}$ =0.6

gives a capacity of 0.6V_{gmax}=0.6 × 54.8=32.9ml/r.At an operating pressure of △P=20MPa the output torque is approx 105Nm.

HA 特性曲线 Control Curve

(P-M) 和 (V_g - $\frac{n}{n\ 在 V_{gmax} 时}$)特性

Characteristic (P-M) and (V_g - $\frac{n}{n\ at\ V_{gmax}}$)

相对转速

Speed ratio $\frac{n}{n\ at\ V_{max}}$

扭矩 Torque M(Nm)

未计效率！ Without considering efficiency!

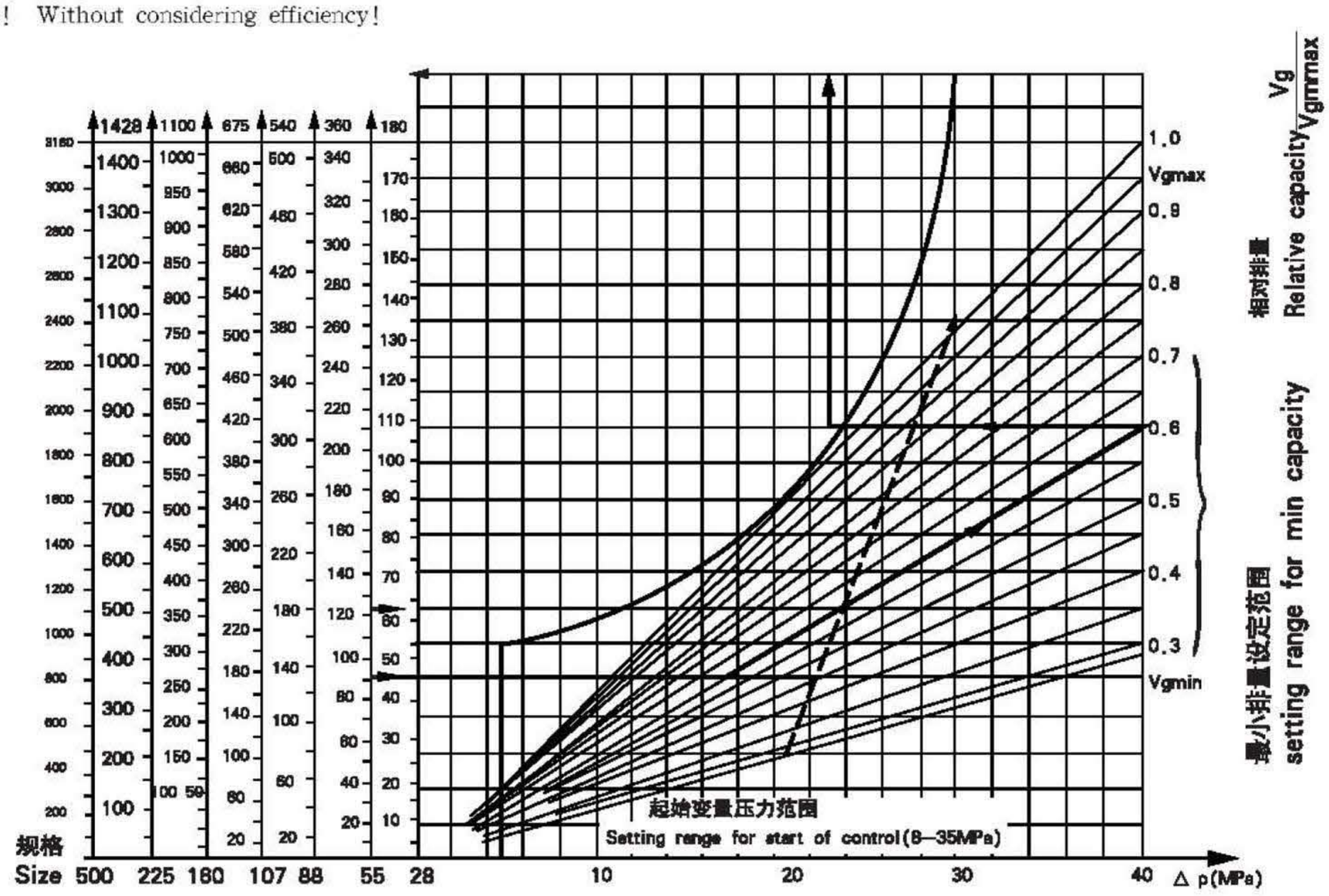

应用示例 1

规格 55:HA1

变量起点压力设定为 17MPa 从 V_{gmin} 到 V_{gmax} 压力恒定，输出扭矩 M=90Nm,

求：马达排量和相对转速。

解：

对于 M=90Nm 和△P=17MPa 由图表 查出相对排量为

$\frac{V_m}{V_{gmax}}=0.6$

和相对转速 $\frac{n}{n\ 在 V_{gmax} 时}=1.666$.

即在相同流量下马达的转速是在最大排量时约 1.666 倍。

这时的排量

$V_g=0.6\times V_{gmax}=0.6\times 54.89$
$=32.9ml/r$

应用示例 2

规格 55:HA2

变量起点压力设定为 20MPa 从 V_{gmin} 到 V_{gmax} 压力升高 10MPa;输出扭矩 M=122Nm;

求：马达排量工作压力和相对转速。

解：对 HA 的变量马达按下述步骤求解

先找出起始变量压力 20MPa 时与 V_{gmin} 线的交点和变量终点压力 20MPa 时与 V_{gmin} 线的交点和变量终点压力 20+10=30MPa 与 V_{gmin} 线的交点，该两点的连线即为该马达的变量特性曲线。

当 M=122Nm 时对应于该点的工作压力△P=23.5MPa;相对排量为：

$\frac{V_g}{V_{gmax}}=0.6$

相对转速为 $\frac{n}{n\ 在 V_{gmax} 时}=1.666$

排量 $V_g=0.6\times V_{gmax}$
$=0.6\times 54.89$
$=32.9ml/r$

Example 1

Size 55:HA 1

Start control set at 17MPa

Model without pressure increase from V_{gmin} to V_{gmax}.

Output torque M=90Nm

Required:Motor capacity and speed ratio

Solution:For a required output torque of 90 Nm and an operating pressure △P=17MPa a capacity ratio

$\frac{V_g}{V_{gmax}}=0.6$ and a speed ratio

$\frac{n}{n\ at\ V_{gmax}}=1.666$,is obtained i.e.

at the same oil flow,the variable motor rotates at a factor of 1.666 faster than at max capacity V_{gmax}.

The capacity ratio

$V_g=0.6\times V_{gmax}=0.6\times 54.89$
$=32.9ml/r$

Example 2

Size 55:HA2

Start of control set at 20MPa Model with pressure increase from V_{gmin} to V_{gmax} 10MPa.Required output torque M=122Nm.

Required:Motor capacity operating pressure and speed ratio.

Solution:For variable motor HA2 with pressure increase,other characteristics apply.

These are obtained as follows.

The intersection point between line V_{gmin} and the pressure line for the end of control (e.g.start of control 20 MPa pressure increase 10MPa=end of control 30 MPa) is taken.

These two points are joined by a straight line.This is the correct characteristic line .For the required output torque of 122 Nm in the example, an operating pressure of approx 23.5 MPa 3.5MPa pressure increase) and a capacity ratio of

$\frac{V_g}{V_{gmax}}=0.6$

is obtained together with a speed ratio

$\frac{n}{n\ at\ V_{gmax}}=1.666$.

The capacity ratio

$V_g=0.6\times V_{gmax}$
$=0.6\times 54.89$
$=32.9ml/r$

外形尺寸 Unit Dimensions
规格 Size 28–225
HD、HS 变量 Control

装配方式 2
Assembly type 2

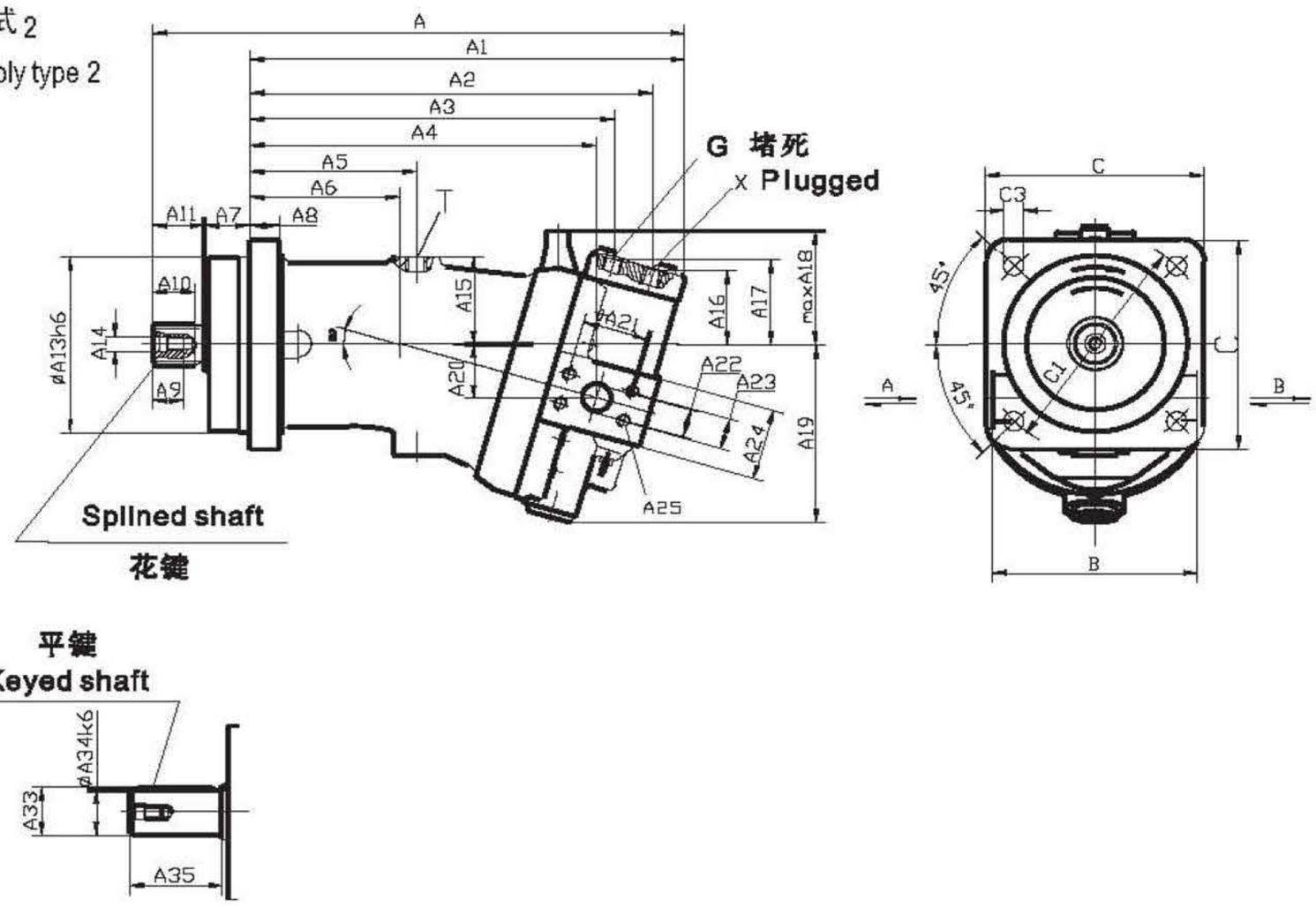

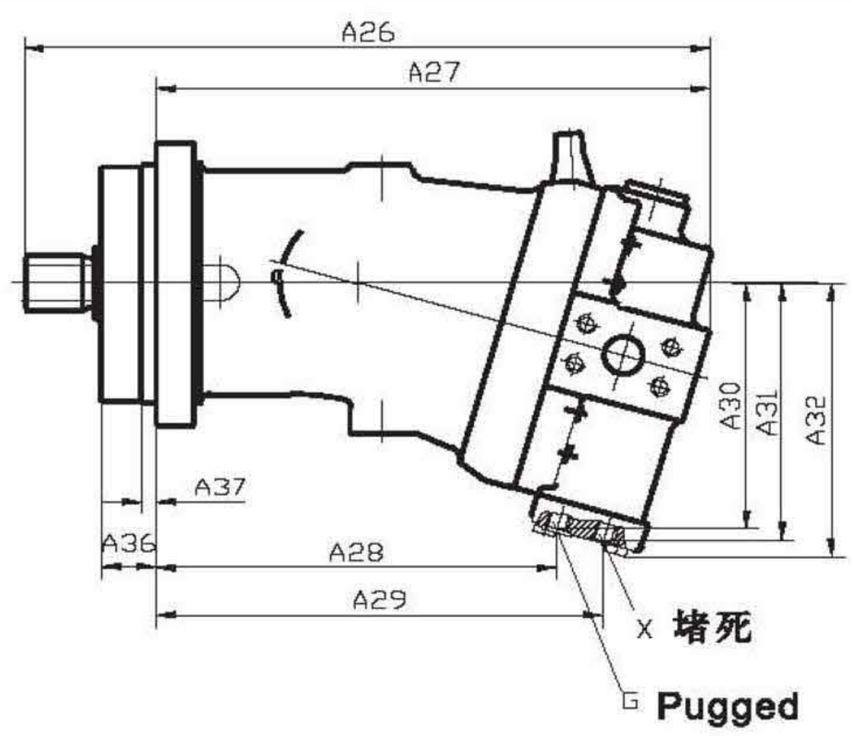

SAE 法兰连接（压力油口） SAE pressure port
螺纹连接（压力油口） Threaded pressure port

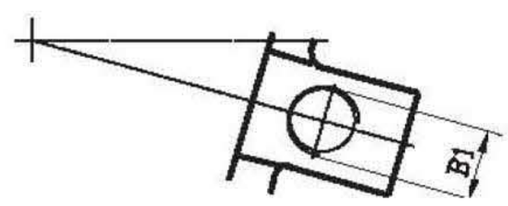

A,B,工作油口	service port
G 多元件同步控制和遥控压力油口	port for synchronous control of multiple units and for remote control pressure.
X 先导（外控）油口	pilot pressure
T 壳体 ·油口	case drain

规格 Size	A	A_1	A_2	A_3	A_4	A_5	A_6	A_7	A_8	A_9	A_{10}	A_{11}	A_{12}	A_{13}	A_{14}	A_{15}	A_{16}	A_{17}	A_{18}	A_{19}	A_{20}	A_{21}	A_{22}	A_{23}	A_{24}	A_{25}	深 deep	A_{26}	A_{27}	A_{28}
28	317	249	230	206	189	107	75	25	16	19	28	43	M16 × 1.5	100	M8	50	57	64	81	110	33	50.8	20	23.8	45	M10	17	298	230	152
55	379	312	291	264	249	123	108	32	20	28	28	35	M18 × 1.5	125	M12	63	52	60	84	132	40	50.8	20	23.8	53	M10	17	368	301	208
80	440	368	345	316	297	152	137	32	23	28	33	40	M18 × 1.5	140	M12	71	59	68	99	150	46	57.2	25	27.8	64	M12	18	425	353	252
107	463	378	356	326	301	145	130	40	25	28	37.5	45	M18 × 1.5	160	M12	80	63	71	104	162	49	57.2	25	27.8	64	M12	18	442	357	259
160	530	440	412	377	354	213	156	40	28	36	42.5	50	M22 × 1.5	180	M16	88	66	77	108	182	57	66.7	32	31.8	70	M14	19	513	423	302.5
225	573	468	441	405	375	222	162	50	32	36	43.5	55	M22 × 1.5	200	M16	96	74	85	121	199	61	66.7	32	31.8	70	M14	21	546	441	324

规格 Size	A_{29}	A_{30}	A_{31}	A_{32}	A_{33}	A_{34}	A_{35}	A_{36}	A_{37}	B	B_1	C	C_1	C_2	C_3	平键 keyed GB1096–79	花键 splined DIN 5480	花键 splined GB3478.1–83	G	X
28	176	124	131	139	27.9	25	50	23	8	116	M27 × 2	118	125	12	11	键 8 × 50	W25 × 1.25 × 18 × 9g	EXT18Z × 1.25M × 30R × 5f	M12 × 1.5	M14 × 1.5
55	235	133	141	153	32.9	30	60	29	10	142	M33 × 2	150	160	16	13.5	键 8 × 50	W30 × 2 × 14 × 9g	EXT14Z × 2m × 30R × 5f	M14 × 1.5	M14 × 1.5
80	282	152	161	177	38	35	70	29.5	10	172	M42 × 2	165	180	16	13.5	键 10 × 56	W35 × 2 × 16 × 9g	EXT16Z × 2m × 30R × 5f	M14 × 1.5	M14 × 1.5
107	288	164	173	188	43.1	40	80	35	10	178	M42 × 2	190	200	20	17.5	键 12 × 63	W40 × 2 × 18 × 9g	EXT18Z × 2m × 30R × 5f	M14 × 1.5	M14 × 1.5
160	338	182.5	193	201	48.5	45	90	36.5	11.5	208	M48 × 2	210	224	20	17.5	键 14 × 70	W45 × 2 × 21 × 9g	EXT21Z × 2m × 30R × 5f	M14 × 1.5	M14 × 1.5
225	359	201	211	219	53.5	50	100	50	12	226	M48 × 2	236	250	25	22	键 14 × 80	W50 × 2 × 24 × 9g	EXT24Z × 2m × 30R × 5f	M14 × 1.5	M14 × 1.5

DA 变量 Control
装配方式 2 Assembly type 2

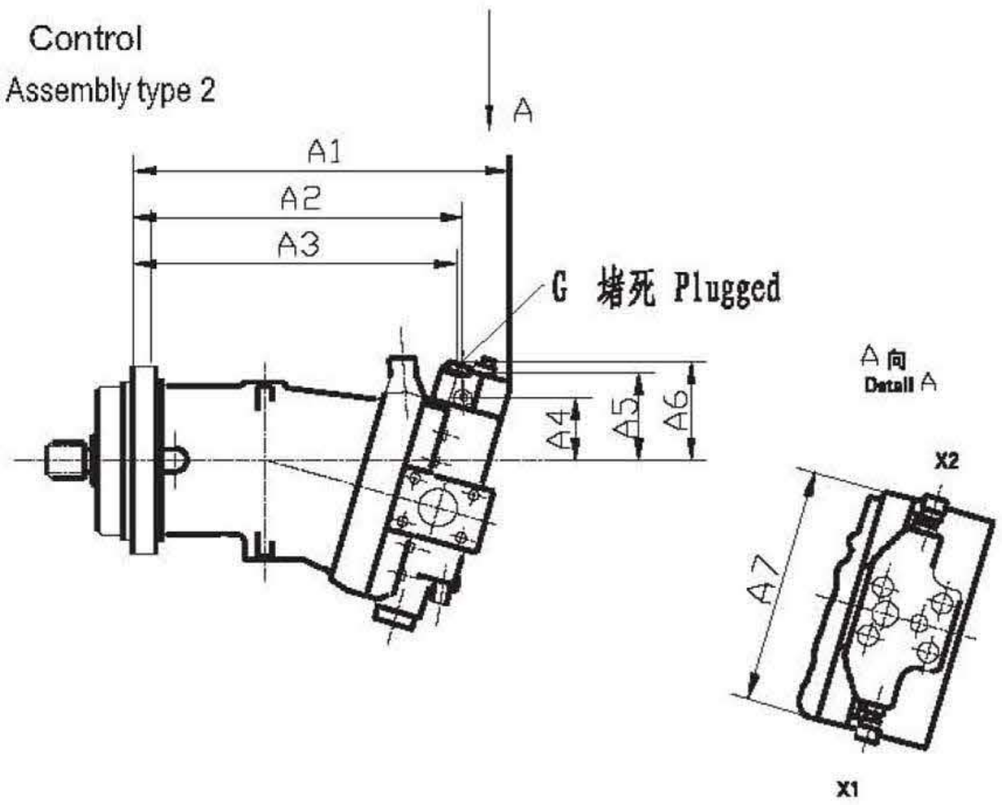

规格 Size	A_1	A_2	A_3	A_4	A_5	A_6	A_7	X_1、X_2
28	253	212	209	53	73	81	144	M14 × 1.5
55	317	272	268	49	70	77	146	M14 × 1.5
80	371	326	322	56	77	83	152	M14 × 1.5
107	380	336	332	59	81	88	152	M14 × 1.5
160	442	387	383	65	86	94	158	M14 × 1.5
225	471	416	411	73	95	103	158	M14 × 1.5

其余尺寸见 HD/HA.

Other dimensions see HD/HA.

EP 变量 Control

装配方式 2
Assembly type 2

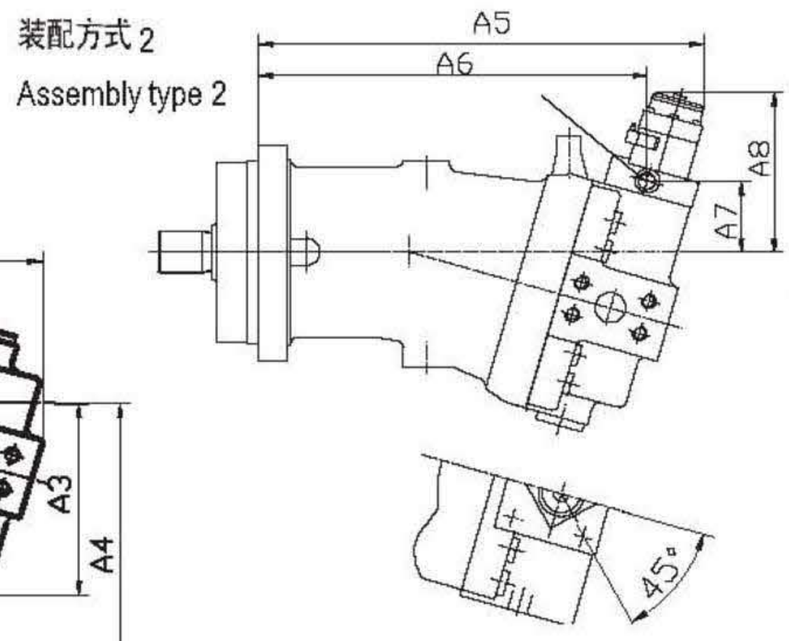

装配方式 1
Assembly type 1

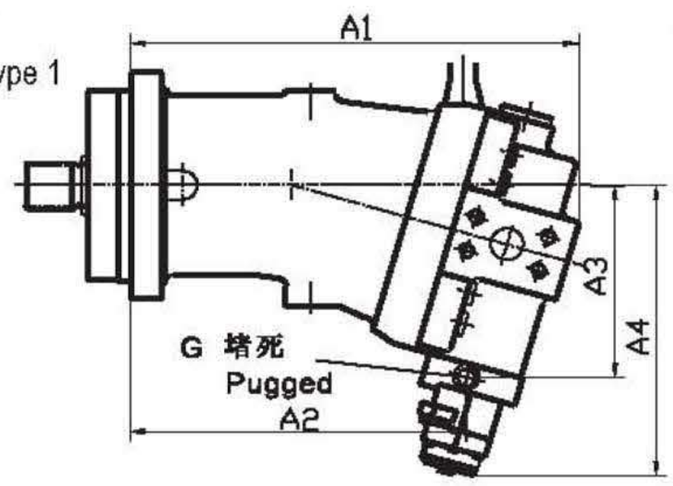

规格 Size	A_1	A_2	A_3	A_4	A_5	A_6	A_7	A_8
28	230	164	119	204	266	212	53	131
55	301	223	129	213	334	274	48	124
80	353	267	148	240	392	326	56	137
107	357	269.5	160	254	393	333	61.5	144
160	423	313	177	265	452	386	70	139
225	441	334	196	284	481	414	74.5	147

其余尺寸见 HD/HA.
Other dimensions see HD/HA

MA 变量 Control
装配方式 1 Assembly type 1

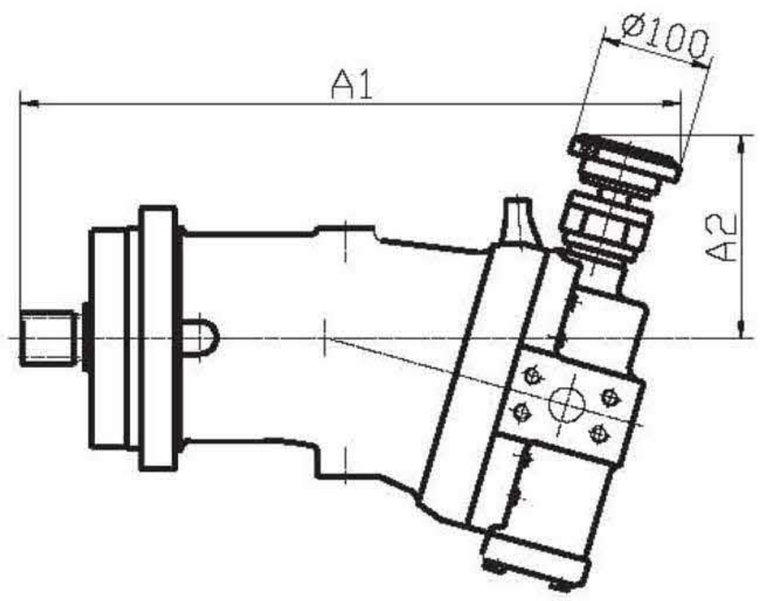

规格 Size	A_1	A_2
28	269	128
55	329	134
80	381	138
107	390	137
160	441	149
225	470	155

其余尺寸见 HD/HA.

Other dimensions see HD/HA.

HD1D

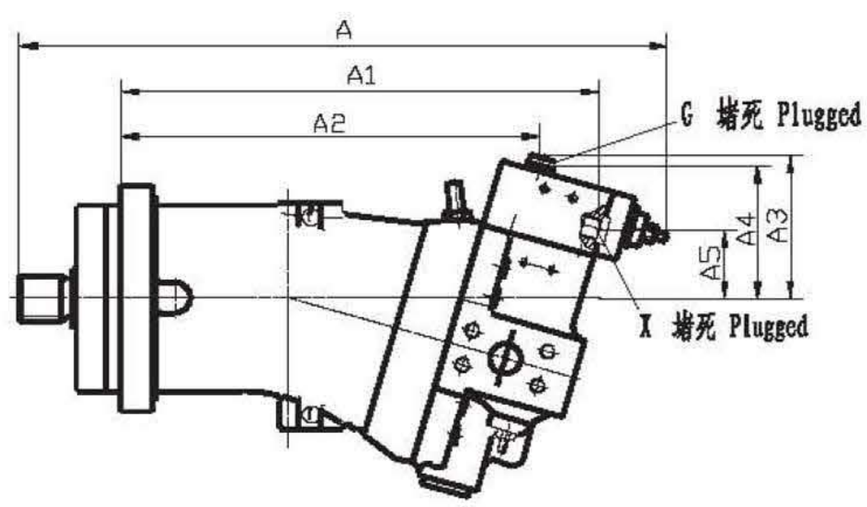

规格 Size	A	A1	A2	A3	A4	A5
55	422	311	273	96	89	46
107	496	376.5	335.5	108	100	56

MO 变量 Control
装配方式 1 Assembly type

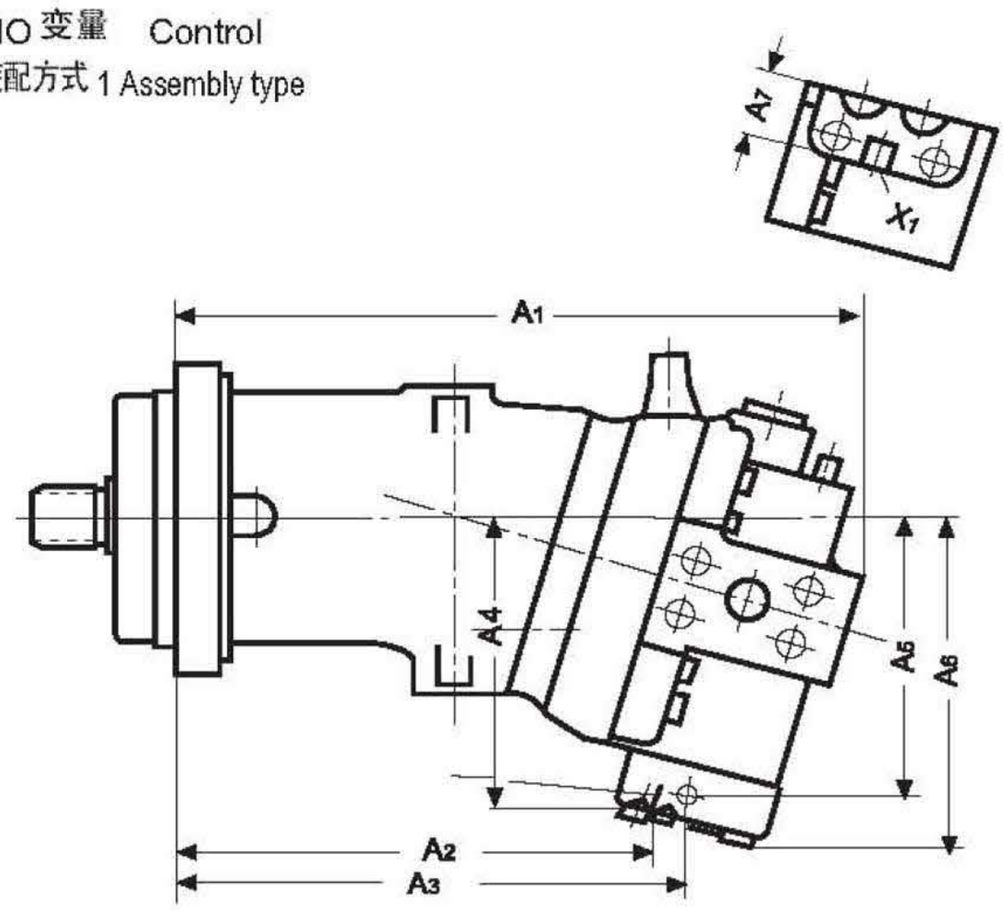

规格 Size	A_1	A_2	A_3	A_4	A_5	A_6	A_7	X_1
55	301	208	224	138	130	155	30	M14 × 1.5
80	353	252	268	157	149	177	33	M14 × 1.5
107	357	257	273	169	161	188	33	M14 × 1.5
160	423	300	312	187	178	206	34	M14 × 1.5
225	441	322	334	206	197	225	34	M14 × 1.5

其余尺寸见 HD/HA.

Other dimensions see HD/HA.

外形尺寸 Unit Dim dimensions
规格 Size 500
HA 变量 Control
花键 Splined
W70 × 3 × 22 × 9g
(DIN 5480)
装配方式 1 Assembly

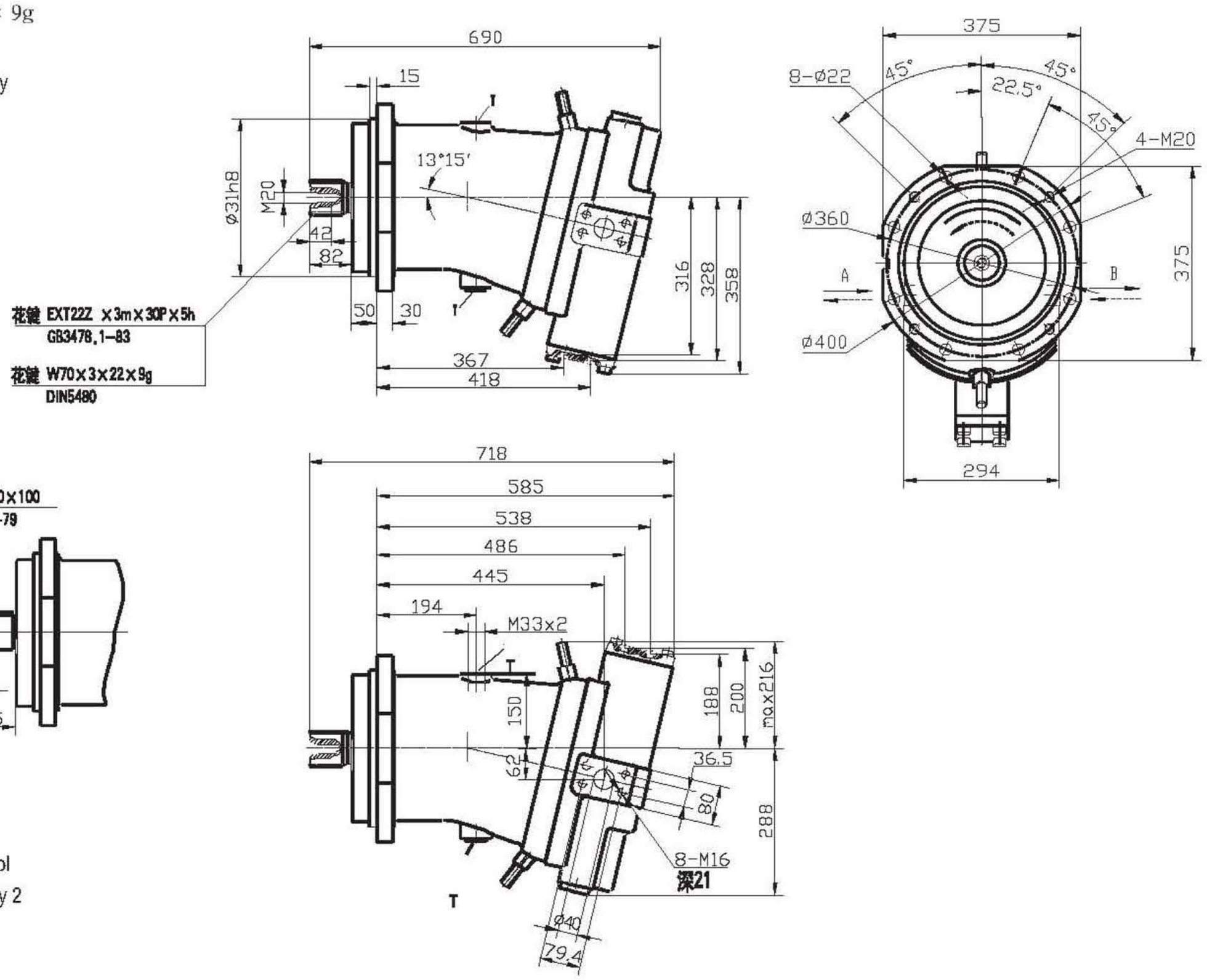

HD 变量 Control
装配方式 2 Assembly 2